LIGHTING CONTROLS UPGRADE

TEMPLE HOYNE BUELL HALL
BUILDING NO. 0339
611 E. LOREDO TAFT DR., CHAMPAIGN, IL

PROJECT CONTACT:

ELECTRICAL ENGINEER:
EVA M. SWEENEY, PE
ph. 217.333.2271
1501 S. OAK ST., ROOM 131
CHAMPAIGN, IL 61820

LEGEND
[ ] - Not included in Sheet Set
[/] - Included in Issued Set

INDEX OF SHEETS

		95% (10.04.2013)	IFP (04.11.2014)	IFC
G-001	COVER SHEET	/	/	
E-001	ELECTRICAL LEGEND & ABBREVIATIONS	/	/	
E-100	BASEMENT PLAN - LIGHTING - CONTROLS	/	/	
E-101	FIRST FLOOR PLAN - LIGHTING - CONTROLS	/	/	
E-102	SECOND FLOOR PLAN - LIGHTING - CONTROLS	/	/	
E-102M	SECOND FLOOR MEZZANINE - LIGHTING - CONTROLS	/	/	
E-103	THIRD FLOOR PLAN - LIGHTING - CONTROLS	/	/	

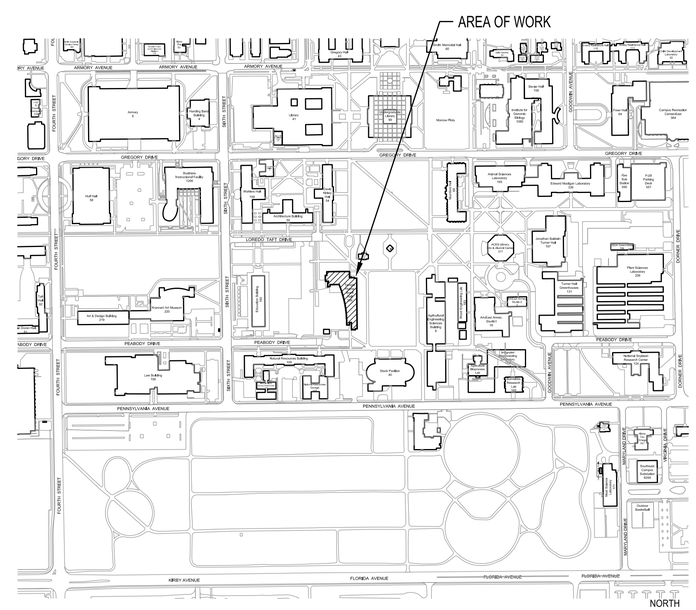

AREA PLAN
NOT TO SCALE

Facilities & Services
ENGINEERING AND CAMPUS SERVICES / ENGINEERING DESIGN
Physical Plant Service Building
1501 S. Oak St., Champaign, MC-800
General Information: 217.333.0697

LIGHTING CONTROLS UPGRADE
TEMPLE HOYNE BUELL HALL
BUILDING NO. 0339
611 E. LORADO TAFT DR., CHAMPAIGN, IL 61820

PRICING

#	Date	Revision Description
-	-	-
-	-	-
-	-	-
-	-	-
-	-	-
-	-	-
-	-	-
-	-	-

Proj. No. 10214352	Date: 11 APR 2014
Reviewed: EMS	Drawn: WDB

COVER SHEET

G-001

of 1 sheets

C:\Projects\0339 Temple Hoyne Buell Hall\2013 Lighting Controls Upgrade\CAD\2013 0339 Lighting Controls Upgrade.dwg, G001, 4/11/2014 2:08:46 PM, dfcope2, 1:1

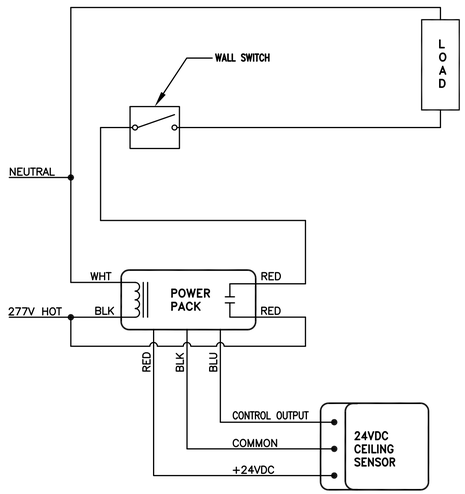

1 CEILING OCCUPANCY SENSOR WITH SINGLE-LEVEL LIGHTING
NO SCALE

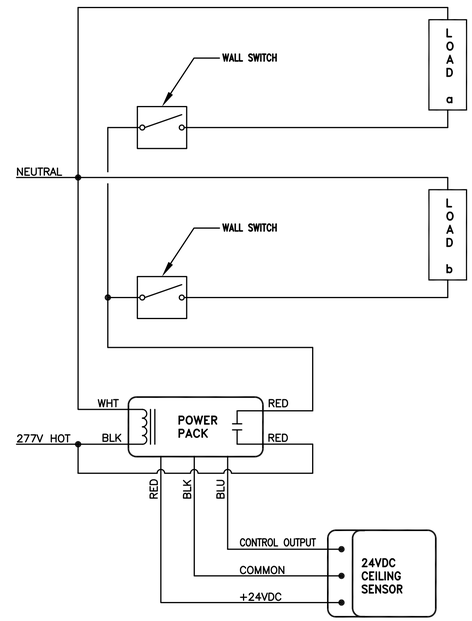

2 CEILING OCCUPANCY SENSOR WITH DUAL-LEVEL LIGHTING
NO SCALE

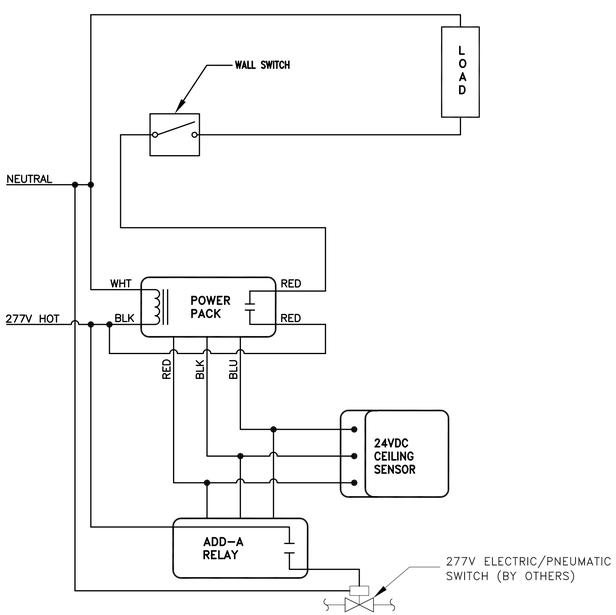

3 CEILING OCCUPANCY SENSOR WITH PNEUMATIC HVAC CONTROLS INTERFACE
NO SCALE

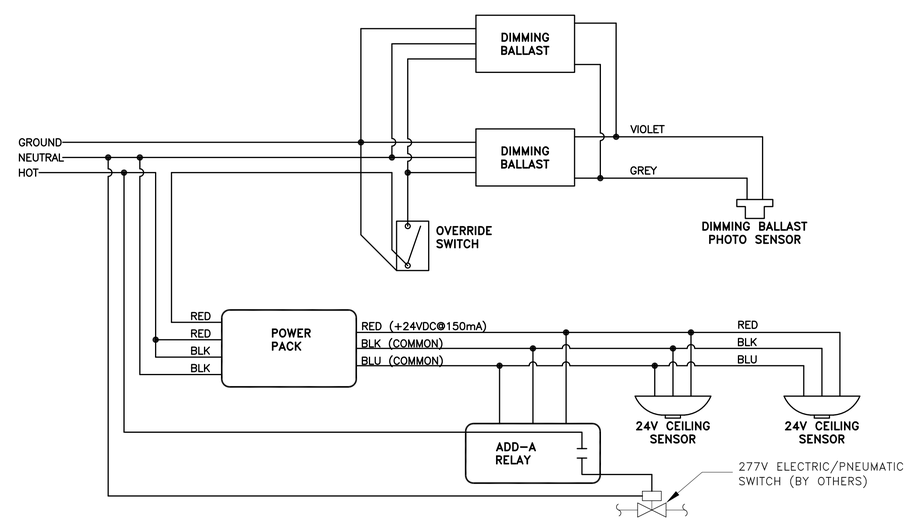

4 DIMMABLE DAYLIGHTING CONTROLS WITH OCCUPANCY SENSOR AND PNEUMATIC HVAC CONTROLS INTERFACE
NO SCALE

ELECTRICAL ABBREVIATIONS

A, AMP	AMPERE
AFF	ABOVE FINISHED FLOOR
AP	ACCESS PANEL
C	CONDUIT
CB	CIRCUIT BREAKER
CKT	CIRCUIT
DC	DIRECT CURRENT
DISC	DISCONNECT
DN	DOWN
EC	ELECTRICAL CONTRACTOR
ECB	ENCLOSED CIRCUIT BREAKER
ELEC	ELECTRIC, ELECTRICAL
EMT	ELECTRICAL METALLIC TUBING
EX	EXISTING
EXT	EXTERIOR
FFA	FROM FLOOR ABOVE
FFB	FROM FLOOR BELOW
FLR	FLOOR
GND	GROUND
HVAC	HEATING, VENTILATING, AIR CONDITIONING
JB	JUNCTION BOX
LV	LOW VOLTAGE
MCB	MAIN CIRCUIT BREAKER
MIN	MINIMUM
MISC	MISCELLANEOUS
MLO	MAIN LUGS ONLY
N/C	NORMALLY CLOSED
N/O	NORMALLY OPEN
NEC	NATIONAL ELECTRICAL CODE
NEMA	NATIONAL ELECTRICAL MFR'S ASSOC.
NTS	NOT TO SCALE
P	POLE
PH	PHASE
PNL	PANEL
PR	PAIR
PRI	PRIMARY
REQ'D	REQUIRED
SPEC	SPECIFICATION
SP	SPARE
SW	SWITCH
TERM	TERMINAL
TFA	TO FLOOR ABOVE
TFB	TO FLOOR BELOW
TYP	TYPICAL
UOD	UNLESS OTHERWISE DENOTED
V	VOLT
VA	VOLT AMPERES
W	WATT
W/	WITH
W/O	WITHOUT
WG	WIRE GUARD/PROTECTIVE SHIELDING
WP	WEATHERPROOF
XFMR	TRANSFORMER

ELECTRICAL SYMBOLS

(NOTE: ALL SYMBOLS MAY NOT BE USED)

- OS1 — OCCUPANCY SENSOR, DUAL TECH, WALL MOUNT WITH SINGLE OVERRIDE BUTTON HUBBELL #AD1277W1 OR EQUAL.
- OS2 — OCCUPANCY SENSOR, DUAL TECH, WALL MOUNT WITH TWO OVERRIDE BUTTONS HUBBELL #AD1277W2 OR EQUAL.
- OSN — OCCUPANCY SENSOR, DUAL TECH, WALL MOUNT WITH NO OVERRIDE BUTTONS HUBBELL #AD1277WN OR EQUAL.
- S C — OCCUPANCY SENSOR, DUAL TECH, CEILING MOUNTED WITH PHOTOCELL AND ISOLATED RELAY HUBBELL #ATD2000 CRP OR EQUAL.
- PP — LOW VOLTAGE POWER PACK HUBBELL #CU300A OR EQUAL.
- LV — LOW VOLTAGE SWITCH
- PC — PHOTOCELL; SWITCHED ONLY HUBBELL #DHT OR EQUAL.
- AAR — ADD-A-RELAY HUBBELL #AAR OR EQUAL.
- PCD — PHOTOCELL; FOR DIMMING CONTROL HUBBELL #DHTD OR EQUAL.
- NEW/ REPLACED EXIT SIGN – FACES AND ARROWS AS SHOWN
- F1 — FIXTURE TYPE; 23 — CIRCUIT; a — CONTROL DEVICE
- EXISTING SURFACE MOUNTED FLUORESCENT TROFFER,
- EXISTING RECESSED MOUNTED FLUORESCENT TROFFER,
- EXISTING SUSPENDED MOUNTED FLUORESCENT STRIP OR LINEAR,
- EXISTING SURFACE MOUNTED INCANDESCENT OR HID,
- R — EXISTING RECESSED MOUNTED INCANDESCENT OR HID,
- EXISTING WALL MOUNTED INCANDESCENT OR HID,
- EXISTING TRACK LIGHTING – HEADS AS SHOWN
- EXISTING SINGLE POLE SWITCH (LOWER CASE LETTER INDICATES SWITCH LEG)
- 3 — EXISTING THREE WAY SWITCH
- D — EXISTING DIMMER SWITCH
- EXISTING BRANCH PANEL WITH DESIGNATION
- EXISTING DISTRIBUTION PANEL WITH DESIGNATION

GENERAL ELECTRICAL NOTES:

1. ALL BRANCH CIRCUITS SHALL HAVE GROUND CONDUCTORS.
2. THE ELECTRICAL CONTRACTOR SHALL PROVIDE, IF REQUIRED, ADJUSTMENTS (±) 6'–0" IN THE LOCATION OF ALL SYSTEM DEVICES, FIXTURES, OUTLETS, PANELS, ETC. IN ORDER TO EXPEDITE THE ELECTRICAL WORK. THE POSITION OF ALL WORK AS SHOWN IS INTENDED TO BE FIXED AND IN THE PROPER LOCATION. SUCH REQUIRED ADJUSTMENT SHALL BE DETERMINED BY THE A/E.
3. PROVIDE SEPARATE NEUTRAL FOR EACH BRANCH CIRCUIT PHASE CONDUCTOR. FOR CLARITY NOT ALL NEUTRALS SHOWN ON BRANCH CIRCUIT CONDUIT ROUTING.
4. WHERE NEW DEVICES ARE SHOWN THE ELECTRICAL CONTRACTOR SHALL DO ALL CUTTING, PATCHING AND PAINTING OF EXISTING WALLS. THE ELECTRICAL CONTRACTOR SHALL FAMILIARIZE HIMSELF WITH EXISTING WALL CONSTRUCTION.
5. PROVIDE STAINLESS STEEL FACEPLATES.
6. EXISTING EGRESS/EMERGENCY LIGHTING TO REMAIN AS–IS; DO NOT CONNECT TO NEW AUTOMATIC CONTROLS.

Facilities & Services
ENGINEERING AND CAMPUS SERVICES / ENGINEERING DESIGN
Physical Plant Service Building
1501 S. Oak St., Champaign, MC-800
General Information: 217.333.0697

LIGHTING CONTROLS UPGRADE

TEMPLE HOYNE BUELL HALL
BUILDING NO. 0339
611 E. LORADO TAFT DR., CHAMPAIGN, IL 61820

PRICING

#	Date	Revision Description
-	-	-
-	-	-
-	-	-
-	-	-
-	-	-
-	-	-
-	-	-
-	-	-

Proj. No. 10214352	Date: 11 APR 2014
Reviewed: EMS	Drawn: WDB

ELECTRICAL LEGEND & ABBREVIATIONS

E-001

of 6 sheets

C:\Projects\0339 Temple Hoyne Buell Hall\2013 Lighting Controls Upgrade\CAD\2013 0339 Lighting Controls Upgrade.dwg, E001, 4/11/2014 2:09:15 PM, cfccpn2, 1:1

GENERAL NOTES:

1. PROGRAM ALL SENSORS TO "VACANCY MODE" OPERATION, I.E. MANUAL-ON, AUTO-OFF.
2. ADJUST EACH PHOTOCELL INDIVIDUALLY IN FIELD TO TURN LIGHTS ON AT APPROX. 25 FOOTCANDLES, OFF AT 50 FOOTCANDLES.
3. LOCAL SWITCHES TO REMAIN IN ALL CASES FOR MANUAL OVERRIDE ON/OFF.
4. ALL DEVICES TO BE WHITE IN COLOR, WITH STAINLESS STEEL FACE PLATES.

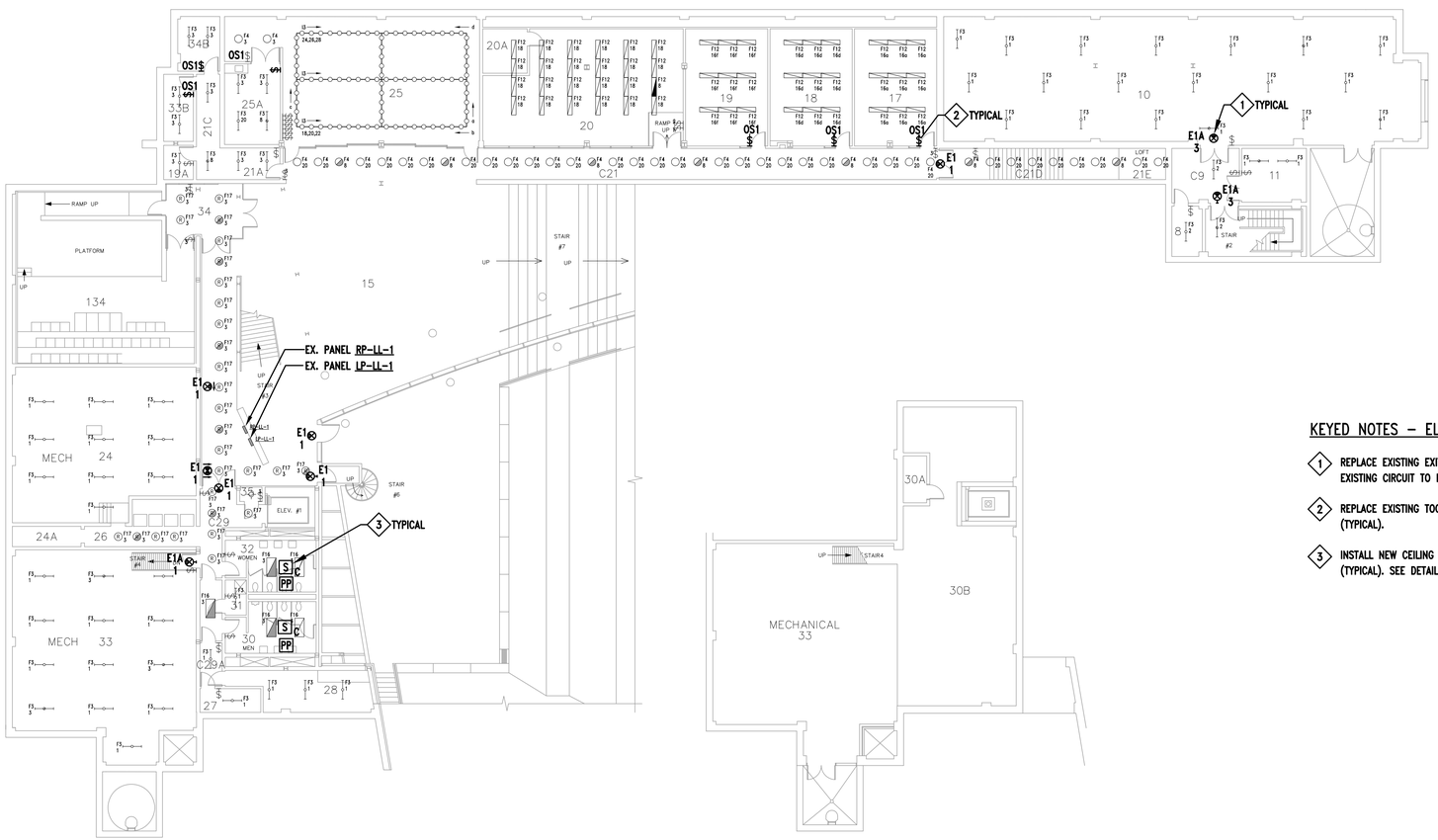

KEYED NOTES – ELECTRICAL:

1. REPLACE EXISTING EXIT SIGN WITH NEW, WILLIAMS #EXIT-R-WHT-AC-SDT. EXISTING CIRCUIT TO BE REUSED (TYPICAL).
2. REPLACE EXISTING TOGGLE SWITCH WITH OCCUPANCY SENSOR SWITCH (TYPICAL).
3. INSTALL NEW CEILING MOUNTED OCCUPANCY SENSOR AND POWER PACK (TYPICAL). SEE DETAIL 1, E-001.

A BASEMENT PLAN - LIGHTING CONTROLS

0 8' 16' 32'

SCALE: 1/16" = 1'-0"

NORTH

Facilities & Services
ENGINEERING AND CAMPUS SERVICES / ENGINEERING DESIGN

Physical Plant Service Building
1501 S. Oak St., Champaign, MC-800

General Information: 217.333.0697

LIGHTING CONTROLS UPGRADE

TEMPLE HOYNE BUELL HALL
BUILDING NO. 0339
611 E. LORADO TAFT DR., CHAMPAIGN, IL 61820

PRICING

#	Date	Revision Description
-	-	-
-	-	-
-	-	-
-	-	-
-	-	-
-	-	-
-	-	-
-	-	-

Proj. No. 10214352	Date: 11 APR 2014
Reviewed: EMS	Drawn: WDB

BASEMENT PLAN
LIGHTING
CONTROLS

E-100

of 6 sheets

O:\Projects\0339 Temple Hoyne Buell Hall\2013 Lighting Controls Upgrade\CAD\2013 0339 Lighting Controls Upgrade.dwg, E100, 4/11/2014 2:09:16 PM, cfcopy2, 1:1

GENERAL NOTES:

1. PROGRAM ALL SENSORS TO "VACANCY MODE" OPERATION, I.E. MANUAL-ON, AUTO-OFF.
2. ADJUST EACH PHOTOCELL INDIVIDUALLY IN FIELD TO TURN LIGHTS ON AT APPROX. 25 FOOTCANDLES, OFF AT 50 FOOTCANDLES.
3. LOCAL SWITCHES TO REMAIN IN ALL CASES FOR MANUAL OVERRIDE ON/OFF.
4. ALL DEVICES TO BE WHITE IN COLOR, WITH STAINLESS STEEL FACE PLATES.

KEYED NOTES – ELECTRICAL:

1. REPLACE EXISTING EXIT SIGN WITH NEW, WILLIAMS #EXIT-R-WHT-AC-SDT. EXISTING CIRCUIT TO BE REUSED (TYPICAL).
2. REPLACE EXISTING TOGGLE SWITCH WITH OCCUPANCY SENSOR SWITCH (TYPICAL).
3. INSTALL NEW CEILING MOUNTED OCCUPANCY SENSOR AND POWER PACK (TYPICAL). SEE DETAIL 1, E-001.
4. PHOTOCELL FOR DAYLIGHT HARVESTING. PROVIDE PHOTOCELL, POWER PACK AND CONNECT TO EXISTING BRANCH CIRCUIT. EXISTING LIGHTS ON EMERGENCY CIRCUIT TO REMAIN AS-IS. NO OCCUPANCY SENSOR FOR CORRIDOR LIGHTING.

A FIRST FLOOR PLAN - LIGHTING - CONTROLS

NORTH

0 8' 16' 32'

SCALE: 1/16" = 1'-0"

Facilities & Services
ENGINEERING AND CAMPUS SERVICES / ENGINEERING DESIGN

Physical Plant Service Building
1501 S. Oak St., Champaign, MC-800

General Information: 217.333.0697

LIGHTING CONTROLS UPGRADE

TEMPLE HOYNE BUELL HALL
BUILDING NO. 0339
611 E. LORADO TAFT DR., CHAMPAIGN, IL 61820

PRICING

#	Date	Revision Description
-	-	-
-	-	-
-	-	-
-	-	-
-	-	-
-	-	-
-	-	-
-	-	-

Proj. No. 10214352	Date: 11 APR 2014
Reviewed: EMS	Drawn: WDB

FIRST FLOOR PLAN
LIGHTING
CONTROLS

E-101

of 6 sheets

O:\Projects\0339 Temple Hoyne Buell Hall\2013 Lighting Controls Upgrade\CAD\2013 0339 Lighting Controls Upgrade.dwg, E101, 4/11/2014 2:09:17 PM, cfcopy2, 1:1

GENERAL NOTES:

1. PROGRAM ALL SENSORS TO "VACANCY MODE" OPERATION, I.E. MANUAL-ON, AUTO-OFF.
2. ADJUST EACH PHOTOCELL INDIVIDUALLY IN FIELD TO TURN LIGHTS ON AT APPROX. 25 FOOTCANDLES, OFF AT 50 FOOTCANDLES.
3. LOCAL SWITCHES TO REMAIN IN ALL CASES FOR MANUAL OVERRIDE ON/OFF.
4. ALL DEVICES TO BE WHITE IN COLOR, WITH STAINLESS STEEL FACE PLATES.

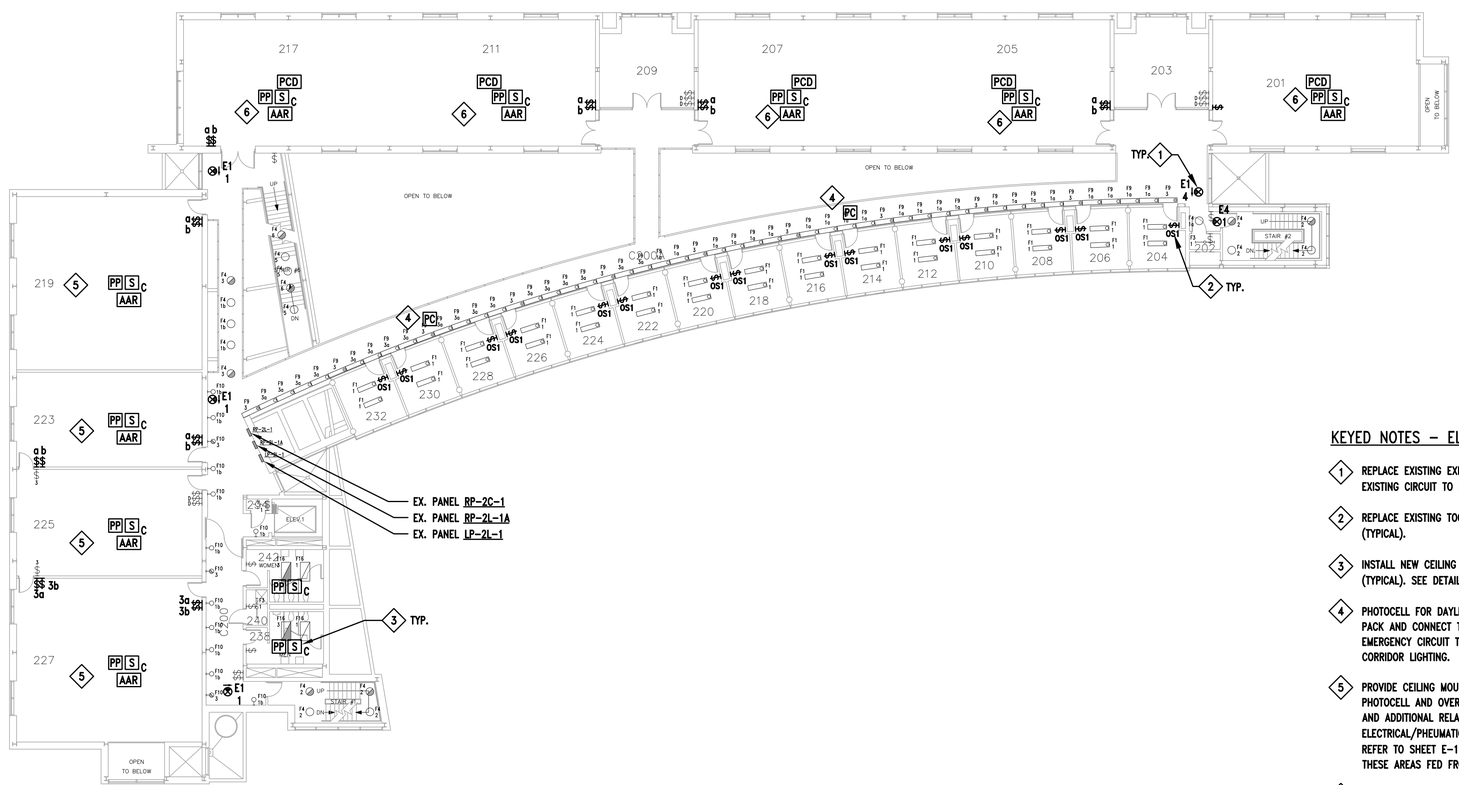

A SECOND FLOOR PLAN - LIGHTING - CONTROLS

SCALE: 1/16" = 1'-0"

NORTH

KEYED NOTES – ELECTRICAL:

1. REPLACE EXISTING EXIT SIGN WITH NEW, WILLIAMS #EXIT-R-WHT-AC-SDT. EXISTING CIRCUIT TO BE REUSED (TYPICAL).
2. REPLACE EXISTING TOGGLE SWITCH WITH OCCUPANCY SENSOR SWITCH (TYPICAL).
3. INSTALL NEW CEILING MOUNTED OCCUPANCY SENSOR AND POWER PACK (TYPICAL). SEE DETAIL 1, E-001.
4. PHOTOCELL FOR DAYLIGHT HARVESTING. PROVIDE PHOTOCELL, POWER PACK AND CONNECT TO EXISTING BRANCH CIRCUIT. EXISTING LIGHTS ON EMERGENCY CIRCUIT TO REMAIN AS-IS. NO OCCUPANCY SENSOR FOR CORRIDOR LIGHTING.
5. PROVIDE CEILING MOUNT OCCUPANCY SENSOR, WITH INTEGRATED PHOTOCELL AND OVERRIDE SWITCHES. ALSO PROVIDE CONTROLS SIGNAL AND ADDITIONAL RELAY FOR CONNECTION TO HVAC ELECTRICAL/PNEUMATIC SWITCH. SEE DETAIL 3, SHEET E-100. REFER TO SHEET E-102M FOR LOCATIONS OF FIXTURES AND CIRCUITS IN THESE AREAS FED FROM MEZZANINE PANELBOARDS.
6. PROVIDE CEILING MOUNT OCCUPANCY SENSOR, DIMMING PHOTOCELL AND NEW 0-10V OVERRIDE SWITCHES. ALSO PROVIDE CONTROLS SIGNAL AND ADDITIONAL RELAY FOR CONNECTION TO HVAC ELECTRICAL/PNEUMATIC SWITCH. SEE DETAIL 4, SHEET E-100. REFER TO SHEET E-102M FOR LOCATIONS OF FIXTURES AND CIRCUITS IN THESE AREAS FED FROM MEZZANINE PANELBOARDS.

Facilities & Services
ENGINEERING AND CAMPUS SERVICES / ENGINEERING DESIGN
Physical Plant Service Building
1501 S. Oak St., Champaign, MC-800
General Information: 217.333.0697

LIGHTING CONTROLS UPGRADE

TEMPLE HOYNE BUELL HALL
BUILDING NO. 0339
611 E. LORADO TAFT DR., CHAMPAIGN, IL 61820

PRICING

#	Date	Revision Description
-	-	-
-	-	-
-	-	-
-	-	-
-	-	-
-	-	-
-	-	-
-	-	-

Proj. No. 10214352	Date: 11 APR 2014
Reviewed: EMS	Drawn: WDB

SECOND FLOOR PLAN
LIGHTING
CONTROLS

E-102

of 6 sheets

O:\Projects\0339 Temple Hoyne Buell Hall\2013 Lighting Controls Upgrade\CAD\2013 0339 Lighting Controls Upgrade.dwg, E102, 4/11/2014 2:09:19 PM, cfcope2, 1:1

GENERAL NOTES:

1. PROGRAM ALL SENSORS TO "VACANCY MODE" OPERATION, I.E. MANUAL-ON, AUTO-OFF.
2. ADJUST EACH PHOTOCELL INDIVIDUALLY IN FIELD TO TURN LIGHTS ON AT APPROX. 25 FOOTCANDLES, OFF AT 50 FOOTCANDLES.
3. LOCAL SWITCHES TO REMAIN IN ALL CASES FOR MANUAL OVERRIDE ON/OFF.
4. ALL DEVICES TO BE WHITE IN COLOR, WITH STAINLESS STEEL FACE PLATES.

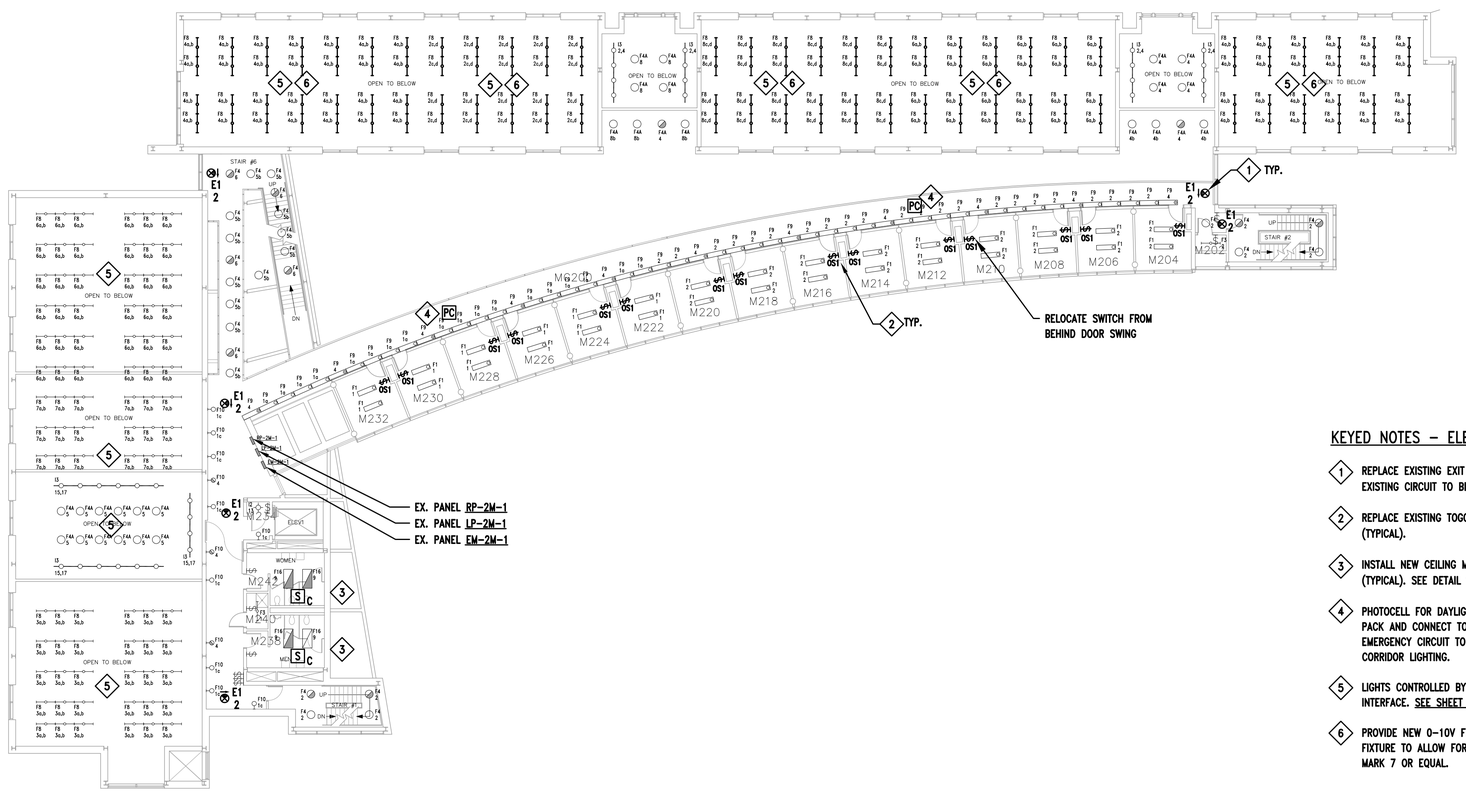

KEYED NOTES – ELECTRICAL:

1. REPLACE EXISTING EXIT SIGN WITH NEW, WILLIAMS #EXIT-R-WHT-AC-SDT. EXISTING CIRCUIT TO BE REUSED (TYPICAL).
2. REPLACE EXISTING TOGGLE SWITCH WITH OCCUPANCY SENSOR SWITCH (TYPICAL).
3. INSTALL NEW CEILING MOUNTED OCCUPANCY SENSOR AND POWER PACK (TYPICAL). SEE DETAIL 1, E-001.
4. PHOTOCELL FOR DAYLIGHT HARVESTING. PROVIDE PHOTOCELL, POWER PACK AND CONNECT TO EXISTING BRANCH CIRCUIT. EXISTING LIGHTS ON EMERGENCY CIRCUIT TO REMAIN AS-IS. NO OCCUPANCY SENSOR FOR CORRIDOR LIGHTING.
5. LIGHTS CONTROLLED BY PHOTOCELL AND OCCUPANCY SENSOR, WITH HVAC INTERFACE. SEE SHEET E-102.
6. PROVIDE NEW 0-10V FLUORESCENT DIMMING BALLASTS FOR EACH FIXTURE TO ALLOW FOR DIMMABLE DAYLIGHTING CONTROL. ADVANCE MARK 7 OR EQUAL.

A SECOND FLOOR MEZZANINE - LIGHTING - CONTROLS

0 8' 16' 32'

SCALE: 1/16" = 1'-0"

NORTH

Facilities & Services
ENGINEERING AND CAMPUS SERVICES / ENGINEERING DESIGN

Physical Plant Service Building
1501 S. Oak St., Champaign, MC-800

General Information: 217.333.0697

LIGHTING CONTROLS UPGRADE

TEMPLE HOYNE BUELL HALL
BUILDING NO. 0339
611 E. LORADO TAFT DR., CHAMPAIGN, IL 61820

PRICING

#	Date	Revision Description
-	-	-
-	-	-
-	-	-
-	-	-
-	-	-
-	-	-
-	-	-
-	-	-

Proj. No. 10214352	Date: 11 APR 2014
Reviewed: EMS	Drawn: WDB

2ND FLR. MEZZANINE LIGHTING CONTROLS

E-102M

of 6 sheets

O:\Projects\0339 Temple Hoyne Buell Hall\2013 Lighting Controls Upgrade\CAD\2013 0339 Lighting Controls Upgrade.dwg, E102M, 4/11/2014 2:09:20 PM, cfcope2, 1:1

GENERAL NOTES:

1. PROGRAM ALL SENSORS TO "VACANCY MODE" OPERATION, I.E. MANUAL-ON, AUTO-OFF.
2. ADJUST EACH PHOTOCELL INDIVIDUALLY IN FIELD TO TURN LIGHTS ON AT APPROX. 25 FOOTCANDLES, OFF AT 50 FOOTCANDLES.
3. LOCAL SWITCHES TO REMAIN IN ALL CASES FOR MANUAL OVERRIDE ON/OFF.
4. ALL DEVICES TO BE WHITE IN COLOR, WITH STAINLESS STEEL FACE PLATES.

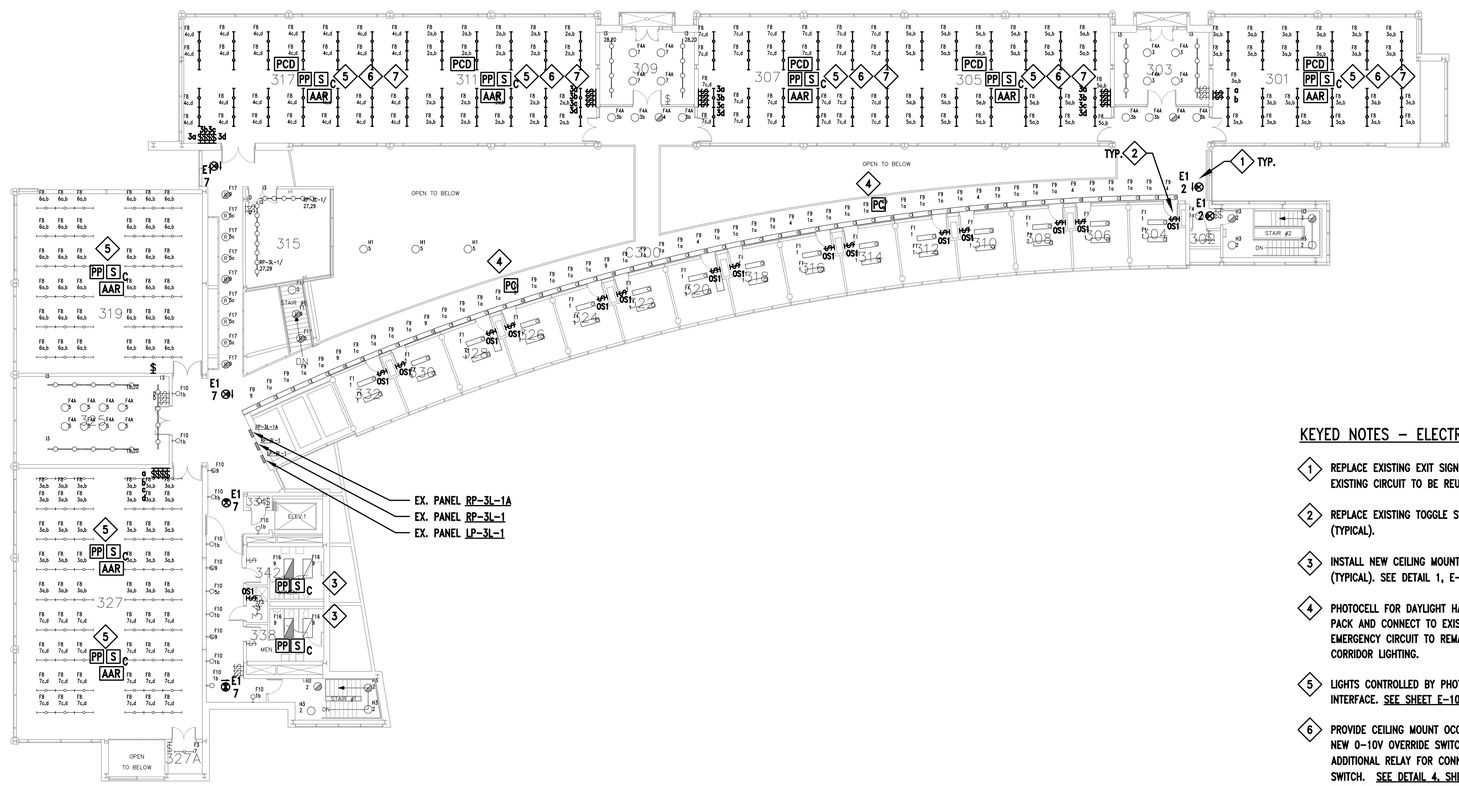

A THIRD FLOOR PLAN - LIGHTING - DEMOLITION

SCALE: 1/16" = 1'-0"

NORTH

KEYED NOTES – ELECTRICAL:

1. REPLACE EXISTING EXIT SIGN WITH NEW, WILLIAMS #EXIT-R-WHT-AC-SDT. EXISTING CIRCUIT TO BE REUSED (TYPICAL).
2. REPLACE EXISTING TOGGLE SWITCH WITH OCCUPANCY SENSOR SWITCH (TYPICAL).
3. INSTALL NEW CEILING MOUNTED OCCUPANCY SENSOR AND POWER PACK (TYPICAL). SEE DETAIL 1, E-001.
4. PHOTOCELL FOR DAYLIGHT HARVESTING. PROVIDE PHOTOCELL, POWER PACK AND CONNECT TO EXISTING BRANCH CIRCUIT. EXISTING LIGHTS ON EMERGENCY CIRCUIT TO REMAIN AS-IS. NO OCCUPANCY SENSOR FOR CORRIDOR LIGHTING.
5. LIGHTS CONTROLLED BY PHOTOCELL AND OCCUPANCY SENSOR WITH HVAC INTERFACE. SEE SHEET E-102.
6. PROVIDE CEILING MOUNT OCCUPANCY SENSOR, DIMMING PHOTOCELL AND NEW 0-10V OVERRIDE SWITCHES. ALSO PROVIDE CONTROLS SIGNAL AND ADDITIONAL RELAY FOR CONNECTION TO HVAC ELECTRICAL/PNEUMATIC SWITCH. SEE DETAIL 4, SHEET E-100.
   REFER TO SHEET E-102M FOR LOCATIONS OF FIXTURES AND CIRCUITS IN THESE AREAS FED FROM MEZZANINE PANELBOARDS.
7. PROVIDE NEW 0-10V FLUORESCENT DIMMING BALLASTS FOR EACH FIXTURE TO ALLOW FOR DIMMABLE DAYLIGHTING CONTROL. ADVANCE MARK 7 OR EQUAL.

Facilities & Services
ENGINEERING AND CAMPUS SERVICES / ENGINEERING DESIGN

Physical Plant Service Building
1501 S. Oak St., Champaign, MC-800

General Information: 217.333.0697

LIGHTING CONTROLS UPGRADE

TEMPLE HOYNE BUELL HALL
BUILDING NO. 0339
611 E. LORADO TAFT DR., CHAMPAIGN, IL 61820

PRICING

#	Date	Revision Description
-	-	-
-	-	-
-	-	-
-	-	-
-	-	-
-	-	-
-	-	-
-	-	-

Proj. No. 10214352	Date: 11 APR 2014
Reviewed: EMS	Drawn: WDB

THIRD FLOOR PLAN
LIGHTING
CONTROLS

E-103

of 6 sheets

O:\Projects\0339 Temple Hoyne Buell Hall\2013 Lighting Controls Upgrade\CAD\2013 0339 Lighting Controls Upgrade.dwg, E103, 4/11/2014 2:09:21 PM, cfcopy2, 1:1